F-WAVE® REVIA® Estate Series Synthetic Roofing Shingles

ABOUT THIS MANUAL

- This Installation manual is for Steep-Slope residential applications of F-WAVE® REVIA® Roofing Shingles. For support with non-residential Steep-Slope Installations, or for any other questions about the installation of F-WAVE® REVIA® Roofing Shingles, please call FWAVE Technical Support at 888-GO-FWAVE (888-463-9283).
- To obtain a Spanish-language version of this Installation Manual for Steep-Slope Residential Installations, please visit fwaveroofing.com or call FWAVE Technical Support at 888-GO-FWAVE (888-463-9283).
- ***Para obtener una versión en Español de este Manual Para Instalaciones Residenciales De Pendiente Pronunciada por favor visite fwaveroofing.com o llame al soporte técnico de FWAVE en el 888-463-9283***.

PURPOSE OF INSTRUCTIONS

- These installation instructions are intended to be a general guide for experienced roofing professionals to use when installing F-WAVE® REVIA® Roofing Shingles.
- Although F-WAVE® REVIA® Roofing Shingles are different from traditional asphalt shingles in terms of design and materials, the installation methods are similar in many aspects.
- This manual specifically addresses the application of general roofing practices to the installation of F-WAVE® REVIA® Roofing Shingles. Not every general roofing practice or detail an installer may encounter on a shingle installation is included in this manual. **Before installation, the installer must ensure adherence to all applicable state and local building codes**.

NOTE: FWAVE shingles must be installed according to FWAVE application instructions and requirements by a roofing professional. FWAVE assumes no responsibility for leaks and other defects that result from failure to properly prepare the surface to which the shingles are applied, or from improper or poor application — this includes the required use of smooth, flat roof decks in good condition, the required use of a synthetic roofing underlayment, the required use of only approved sealants or adhesives, and the requirement for the installer to provide proper attic ventilation in accordance with standard minimum requirements. Installer is responsible for reviewing all applicable building codes and property standards and requirements before installation. Installation instructions are printed on the inside of each REVIA® Shingle wrapper and are available at fwaveroofing.com.

General Installation

Any significant differences between the installation of traditional asphalt shingles and F-WAVE® REVIA® Roofing Shingles are set forth in this manual. Installers should carefully read and understand each section of this manual. When installing F-WAVE® REVIA® Roofing Shingles always be sure to consult your local building codes and regulations, minimum property standards, and follow all applicable requirements. Additional information, including requirements for a FORTIFIED Home™, is available at fwaveroofing.com/resources.

SAFETY

- FALL PROTECTION EQUIPMENT MAY BE REQUIRED AND IS ALWAYS ADVISABLE.
- ALL ROOFING AND RELATED ACTIVITIES SHOULD ALWAYS BE COMPLETED WITH SAFETY IN MIND. ALL GOOD AND PROVEN SAFETY PRACTICES SHOULD BE FOLLOWED.
- ROOFING ACTIVITY CAN BE DANGEROUS. ALL NECESSARY PRECAUTIONS AND SAFETY GUIDELINES MUST BE FOLLOWED IN ACCORDANCE WITH PROPER ROOFING TRADE PRACTICES AND REGULATIONS, OSHA REQUIREMENTS AND LOCAL BUILDING CODES.

ROOF DECK

- Select and install a roof deck adhering to local building codes, minimum property standards, and manufacturers' recommendations.
- FWAVE recommends using at least ***15/32" (12mm) thick plywood*** or at least ***7/16" (11mm) thick OSB*** decking.
- ***Roof decks must be well seasoned, well supported, properly attached, and provide a SMOOTH, FLAT, nailable surface for installing shingles. Ensure roof deck and other roofing materials are dry before installing shingles***.

UNDERLAYMENT

- Select and install underlayment adhering to local building codes, manufacturers' published installation requirements, and FWAVE's requirements.
- ASTM E108 & UL790 installations:
  - For a ***Class A*** Roof Assembly, FWAVE requires a ***double layer*** of ***GAF Tiger Paw*** underlayment installed according to manufacturer's requirements. Always make sure the roof design and installation provides for proper ventilation to help avoid high humidity, condensation, and mold growth problems. A design professional must always address the potential for moisture entrapment, excessive moisture build-up, and condensation. Local building codes in your area should also be reviewed for

ventilation requirements. See ATTIC VENTILATION section.

- For a ***Class B*** Roof Assembly, FWAVE requires a ***single layer*** of ***synthetic underlayment*** that complies with ***ASTM D226, Type I*** or ***Type II; ASTM D4869, Type I*** or ***Type II***; or ***ASTM D6757***.

- Follow local building codes when installing waterproofing underlayment. FWAVE requires smooth-surfaced, non-granulated, self-adhering waterproofing underlayment compliant to ***ASTM D1970***. Waterproofing underlayment is recommended for flashing critical areas such as valleys, eaves, ridges, hips, pipe penetrations, dormers, slope changes, skylights, and chimneys.
- Underlayment must be applied flat and unwrinkled to the roof deck. After the application of the underlayment, shingles should be installed as soon as possible. FWAVE does not approve of radiant barrier type products as underlayment for F-WAVE® REVIA® Roofing Shingles.

ROOF REPLACEMENT

- Check with local building codes to determine whether pre-inspections or approvals are required. Determine any specific standards that must be followed as defined by relevant building codes and minimum property standards.
- The FWAVE WeatherForce® Advantage Standard Product Limited Warranty requires installation over a ***FLAT, SMOOTH***, clean roof deck covered with underlayment as specified in the UNDERLAYMENT section. ***Re-roofing over existing asphalt shingles or other roofing materials is NOT allowed***.
- The existing structure and deck must be suitable for providing safe working conditions and the addition of the new shingles. Check that existing ventilation is adequate and will meet the minimum standards as defined in relevant building codes and minimum property standards.

ICE DAM PROTECTION

- In climates that have the potential for snow and ice there is always a possibility for the formation of ice dams at the eaves and any other uninsulated or unheated overhangs.
- In such climates, install waterproofing membrane complying with local building codes, and FWAVE's requirements.
- In such climates, FWAVE requires that waterproofing underlayment, as specified in the UNDERLAYMENT section, be applied at the eaves, and extend a minimum of ***24" (610mm)*** up the roof deck from the location of the interior side of exterior walls.

DRIP EDGE

- Install non-corroding drip edge metal adhering to local building codes and minimum property standards. FWAVE recommends using stock metal 6" (152mm) wide and at least ***0.019" (0.5mm) thick***.
- **EAVES** - FWAVE recommends a ***D-style drip edge*** at the eaves, extending a minimum of ***2" (51mm)*** back from the roof edge; bending downwards over the fascia. See **Figure 1**. Apply underlayment over drip edge metal at eaves.
- **RAKES** - FWAVE recommends a ***T-style modified drip edge*** at rakes to cover the cut edge of the REVIA® shingles. See **Figure 2**. Apply drip edge over underlayment at the rake edges. Trim shingles flush with the T-style drip edge.

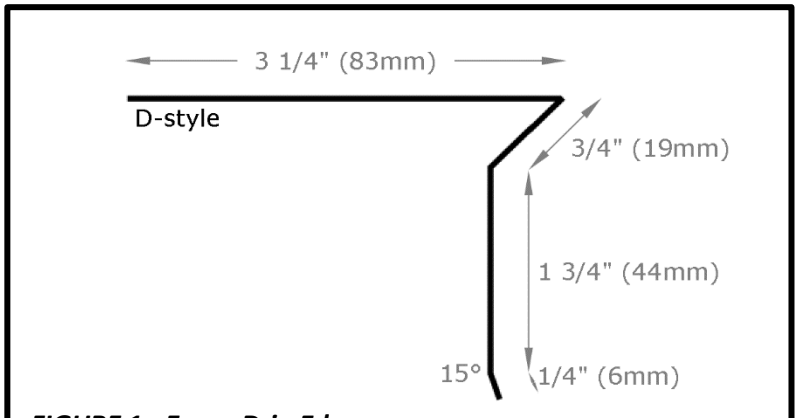

FIGURE 1 - Eaves Drip Edge

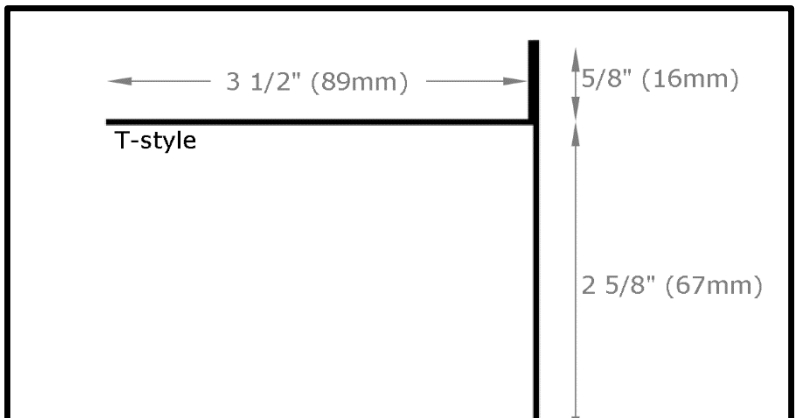

FIGURE 2 - Rake Drip Edge

LOW-SLOPES

- ***Low slopes*** are defined as slopes between 2:12 and 4:12. Roof slopes are defined by the ratio of vertical rise to horizontal run. For example, 2:12 means 2 inches (51mm) vertical rise per 12 inches (305mm) horizontal run.
- For low slope applications, F-WAVE® REVIA® shingles are ornamental in regards to waterproofing. The underlayment installed becomes the primary water barrier.
- FWAVE requires the installation of either ***one layer of self-adhering waterproofing*** underlayment, or ***two layers of synthetic underlayment*** for the entirety of low slope surfaces.
- Installations on slopes below 2:12 are not allowed.

FASTENING

- Select fasteners after consulting and adhering to both local building codes and FWAVE's requirements.
- FWAVE requires the use of ***11- or 12- gauge*** roofing nails, corrosion-resistant, with heads a minimum of ***3/8" (9.5mm)*** in diameter and a minimum of ***1 1/4" (32mm)*** long. Ring-shank nails are recommended. Nails must ***penetrate 3/4" (19mm)*** into the roof deck, or at least ***1/8" (3.2mm) through*** the roof deck for roof decks less than 3/4" (19mm) thick.
- All nails must be driven straight with heads flush to the shingle surface, never cutting into the shingle. See **Figure 3**. Fasteners must not be exposed or visible on the finished roof. Staples are not an approved fastening method.

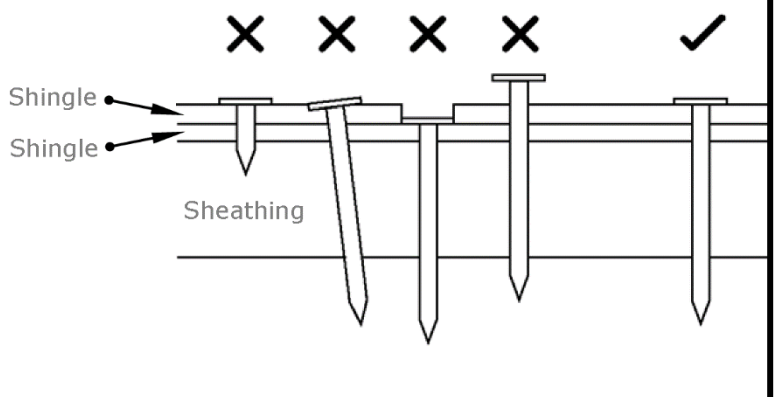

FIGURE 3 - Fastening

FASTENER LOCATIONS

- Use ***six fasteners per shingle*** for ALL applications, including STEEP SLOPES & HIGH WIND applications.
- To ensure shingles are installed correctly, each ***SHINGLE MUST BE IN POSITION AND ALIGNED BEFORE NAILING***. Do not try to adjust the shingle position once the first nail has been installed as this may cause the shingle to bow.
- Fasteners must be located ***1" (25mm)*** from the top of the exposure and within the F-WAVE® REVIA® Roofing Shingle Nailing Zone. Fastener locations are ***1" (25mm), 7" (178mm)*** and ***15" (381mm)*** from each end of the shingle as indicated on each shingle. See **Figure 4**. Fasteners must not be exposed once the installation is complete.

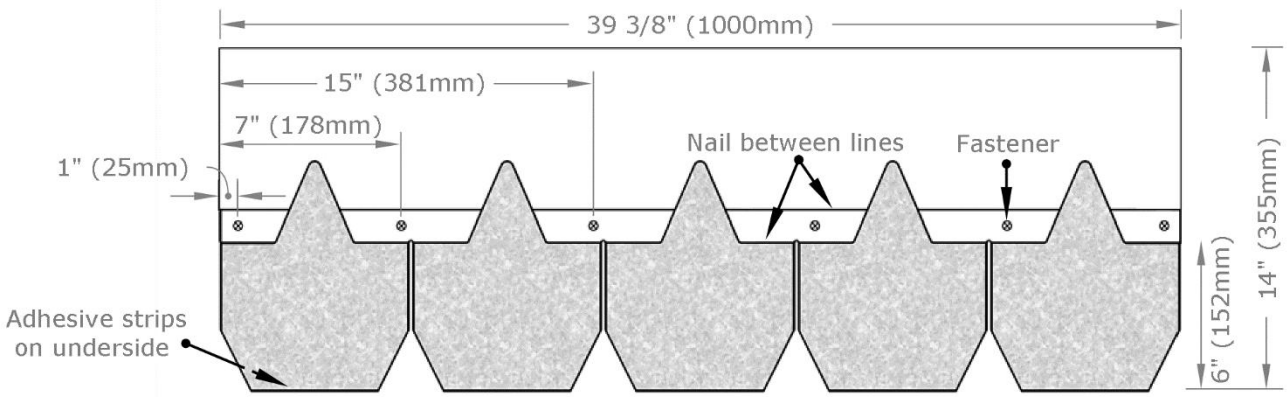

FIGURE 4 - Fastener Pattern

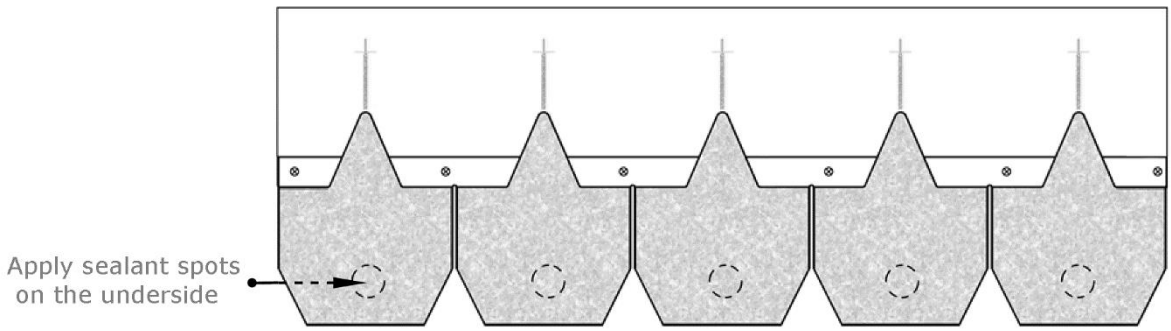

FIGURE 5 - Sealant Spots

HAND SEALING

- Cold weather may delay shingle sealing. FWAVE requires REVIA® shingles be installed at temperatures of ***50°F (10°C)*** and rising with a rooftop surface temperature exceeding ***74°F (23°C)***.
- If shingles do not seal after 48 hours, unsealed tabs may be affixed by hand sealing, or by installing FWAVE Extreme Clips as specified in the Extreme Clip Installation technical bulletin available at fwaveroofing.com/resources.

- Hand seal shingles by applying ***five 1" (25mm) diameter sized spots*** of FWAVE approved sealant and adhesive (see **Table 1**). One spot behind every tab, (total of 5 spots), for the entire slope, near the bottom, as shown in **Figure 5**. Press the shingle down into position. FWAVE approved sealant and adhesive should approach the edge of the shingle, but not be exposed.
- ***Seal failure due to installation temperatures being below the sealant manufacturer's minimum acceptable installation temperature is not a manufacturing defect. FWAVE accepts no responsibility for losses relating to sealant failure due to installation temperatures.***
- Refer to the STEEP SLOPES & HIGH WINDS section for information on when hand sealing is required.

STEEP SLOPES & HIGH WINDS

- For Steep Slopes and High Wind Zones FWAVE requires that ***ALL*** shingle tabs are hand sealed, or affixed with FWAVE Extreme Clips, as specified in the HAND SEALING section. Install six fasteners per shingle as specified in the FASTENER LOCATIONS section.
- FWAVE defines High Winds as ***131mph (211kph)*** or higher. Refer to relevant local building codes and minimum property standards to determine whether your installation is in a High Wind Zone. Steep Slopes are greater than ***21:12***, including ***mansard roofs***. Roof slopes are defined by the ratio of vertical rise to horizontal run. For example, 21:12 means 21 inches (533mm) vertical rise per 12 inches (305mm) horizontal run.

TABLE 1 - APPROVED SEALANTS & ADHESIVES

Manufacturer	Product Name
NPC Sealants	#900 Solar Seal
R. M. Lucas Co.	#6600 Universal Terpolymer Sealant
OSI	Quad® Sealant
Mulehide	SEBS1 approved, (JTS1 NOT approved)

NOTE: ***Do not use asphalt-based underlayments, adhesives or sealants***. These products are not compatible with F-WAVE® REVIA® Synthetic Shingles and will void the WeatherForce® Advantage Limited Product Warranty. Only use FWAVE approved sealants and adhesives as outlined in these installation instructions and in the technical bulletins at fwaveroofing.com/resources

TABLE 1 - Approved Sealants & Adhesives

ATTIC VENTILATION

- FWAVE requires that attic ventilation meets or exceeds minimum standards as defined by the relevant building codes and minimum property standards.
- Improper attic ventilation can cause moisture buildup in the attic, heat stress on the roofing materials, and ice damming. Those situations can lead to premature failure of roofing materials including the wood decking. To ensure proper attic ventilation, air must be allowed to circulate freely from attic eaves to peaks.
- As an alternative to standard attic ventilation, FWAVE does allow for an unvented conditioned attic space utilizing spray foam insulation methods.

Shingle Installation

STARTER COURSE

- FWAVE requires the use of REVIA® Starter Shingles to ensure proper waterproofing and aesthetics. See **Figure 6**.
- Cut ***4" (100mm)*** off the length of the first full starter shingle installed on the roof.
- If using an overhanging drip edge, (such as a D-style drip edge), align the starter's bottom edge flush with the edge of the flashing and the rake. Otherwise, the starter should overhang the eaves by 1/4 inch to 3/8 inch (6mm to 10mm).
- Fasten starter shingles with six fasteners, ***1 1/2" to 3" (38 to 76mm)*** up from the eave edge, and ***1" (25mm), 7" (178mm)*** and ***15" (381mm)*** from each end of the shingle. Continue along the eave with full length starter shingles. Do not install on rakes.

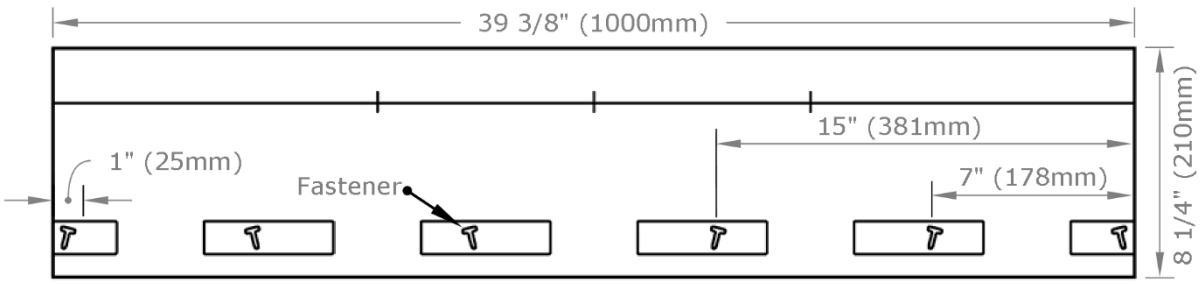

FIGURE 6 - Starter

APPLICATION PATTERN

- F-WAVE® REVIA® Roofing Shingles must be installed in a ***diagonal*** application pattern.
- The offset between courses of Designer Slate: Estate Series shingles must be ***1.5 tabs***. See **Figure 7**.
- It is important that the offset is always 1.5-tabs otherwise uncolored sections of the shingle will be visible on the finished roof. Do not use other patterns such as the racking pattern. Do not use other offsets such as a 0.5-tab offset. These methods form a line of edges going up the roof, which may be noticeable from the ground.

1.5-TAB OFFSET

- **COURSE 1** - Apply a ***full shingle*** flush with the starter course at the lower left-hand corner of the roof and secure with fasteners. See **Figure 8**. Continue to apply full shingles across the roof for the first course.
- Note: shingles may also be installed from the right-hand corner using the same 1.5-tab diagonal pattern.
- **COURSE 2** - Offset the second course of shingles by 1.5 tabs from the first course. Course 2 will have ***1.5 tabs trimmed*** off a full shingle. Apply full shingles for the remainder of the second course.
- **COURSE 3** - Offset the third course of shingles by 1.5 tabs from the second course. Course 3 will have ***3 tabs trimmed*** off a full shingle. Apply full shingles for the remainder of the third course.
- **COURSE 4** - Offset the fourth course of shingles by 1.5 tabs from the third course. Course 4 will have ***4.5 tabs trimmed*** off a full shingle. Apply full shingles for the remainder of the fourth course.
- **COURSE 5 AND FURTHER** - Repeat the pattern by starting again with ***full shingles*** for the fifth course.
- Use the reference marks to ensure correct SHINGLE ALIGNMENT.
- Trim shingles flush with the rake edge. See **Figure 8**.

GENERAL ADVICE

- FWAVE suggests that it is good practice to apply a chalk line every ***4′ to 6′ (1.2m to 1.8m)*** up the roof surface to keep the courses straight and the exposures consistent at ***6″ (152mm)***. Use blue chalk only. Red chalk can leave permanent stains on the roof.
- Pieces cut from shingles along the rake can be used elsewhere on the roof as required.

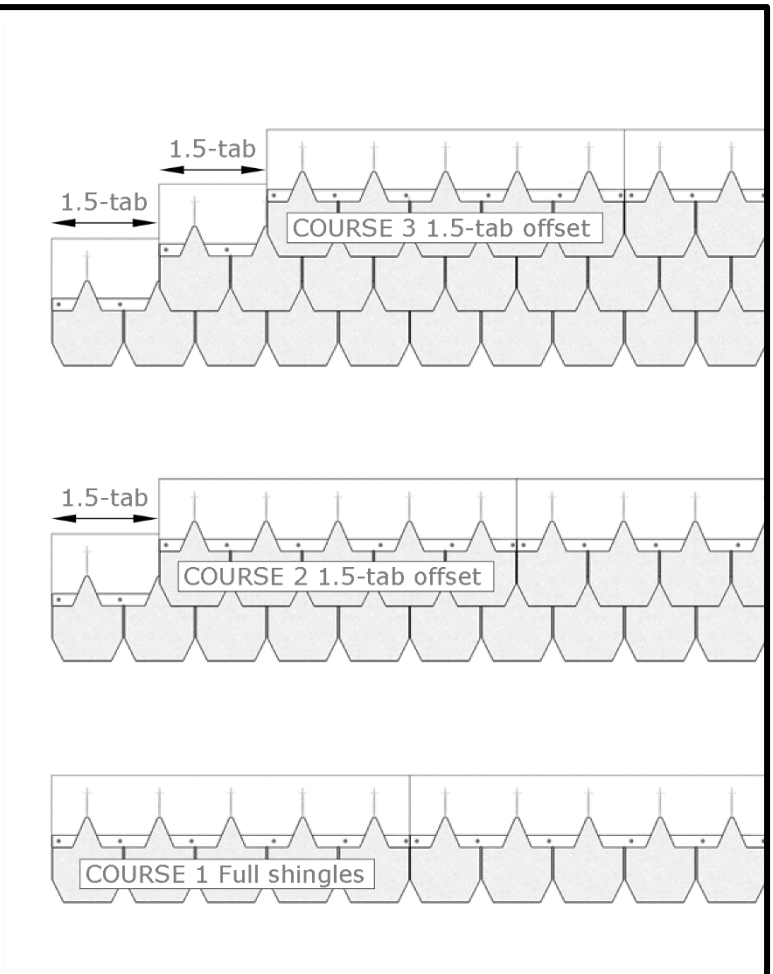

FIGURE 7 - 1.5-tab offset

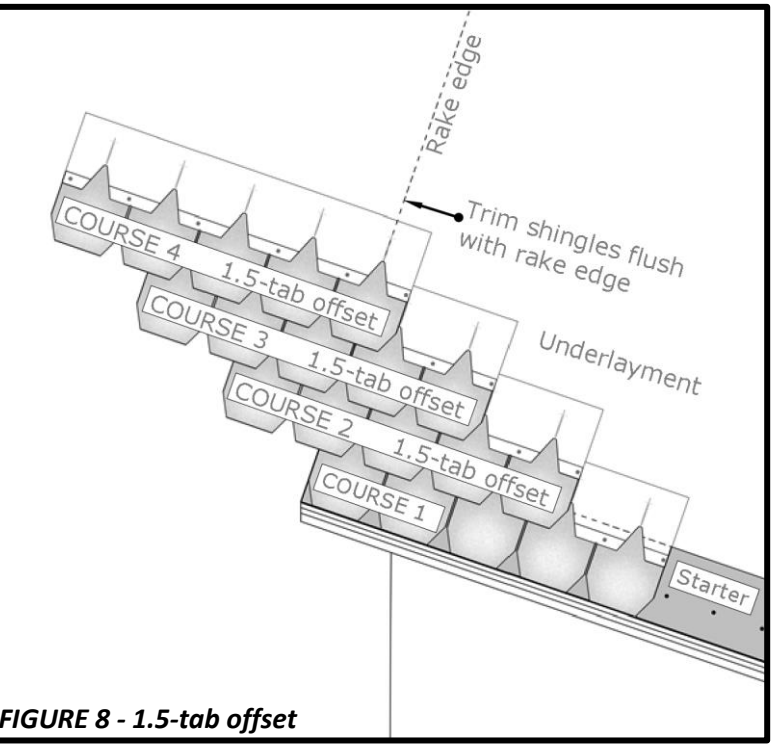

FIGURE 8 - 1.5-tab offset

SHINGLE ALIGNMENT

- When installing F-WAVE® REVIA® Roofing Shingles it is important to place the shingles accurately.
- Install with a ***1.5-tab offset*** by placing the edge of the shingle on the alignment mark. See **Figure 9**.
- When installing shingles side by side, ensure that the edges are flush with each other, so that the course is straight. It is incorrect to misalign or overlap shingles see **Figure 10**.

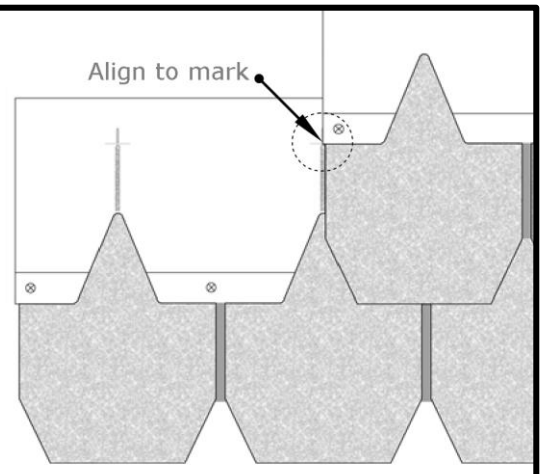

FIGURE 9 - Shingle Alignment

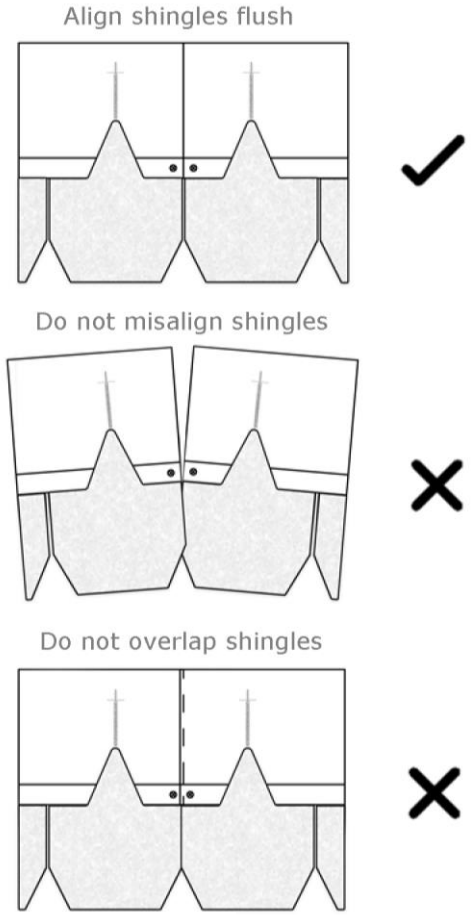

FIGURE 10 - Shingle Alignment

Flashings

VALLEYS

- FWAVE recommends two installation methods; the OPEN VALLEY method and the CLOSED VALLEY ALTERNATIVE.
- **UNDERLAYMENT** - All valley flashings should be in place before shingles are installed near the valleys. Apply a minimum ***36" (915mm)*** wide layer of waterproofing membrane directly to the roof deck. Fasten underlayment over the waterproofing membrane by ***6 " (152mm)***. Refer to local building codes to determine whether alternatives to waterproofing underlayment may be used.
- **VALLEY METAL** - Consult local building codes for width of metal valley and for allowed materials. The width should be a minimum of ***12" (305mm)*** on each side. FWAVE recommends the use of a W-style valley metal. See **Figure 11**. Install the metal valley on top of the underlayment and fasten ***1" (25mm)*** from the edges of the valley. When overlapping metal valley pieces, ensure a minimum overlap of ***4" (102mm)*** and seal together with FWAVE approved sealant and adhesive (see **Table 1**). Do not apply fasteners at the overlaps except on the edges.
- **SHINGLES** - Trim a ***1" (25mm) 45° angle cut*** from the top of the shingle in the valley. See **Figure 12.** Seal valley shingles to the metal by applying two parallel ***1/2" (12.7mm) diameter beads*** that are 1" apart of FWAVE approved sealant and adhesive (see **Table 1**). Trim the shingles at the valley to form either an OPEN VALLEY or CLOSED VALLEY ALTERNATIVE as outlined in the following sections.

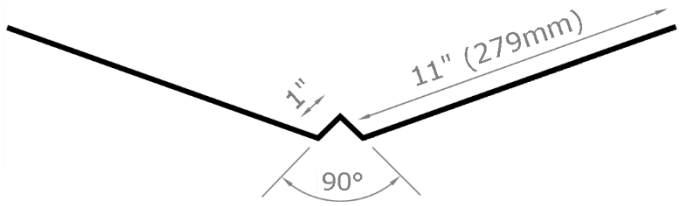

FIGURE 11 - Valley

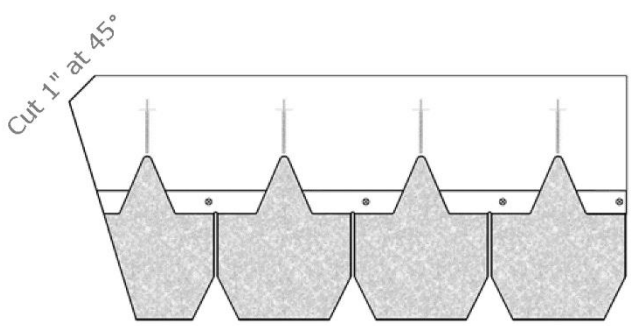

FIGURE 12 - Clip Corner

OPEN VALLEY

- FWAVE prefers the Open Valley method using a "W" style valley metal. To install an open valley, first follow the instructions outlined in the VALLEYS section.
- When it comes to trimming the shingles at the valley, apply a chalk line on either side of the valley. Start at ***4" (102mm)*** wide at the top of the valley and add ***1/8" (3mm)*** for every ***12" (305mm)*** of length of the valley. This will allow for increased water flow near the eaves of the roof.
- Trim shingles to the chalk line. See **Figure 13**.

CLOSED VALLEY ALTERNATIVE

- To produce a closed valley look, FWAVE recommends a Closed Valley Alternative method using a "W" style valley metal. ***Closed valley methods such as the 'closed cut' and 'woven' methods are NOT allowed***.
- To install the Closed Valley Alternative, first follow the instructions outlined in the VALLEYS section.
- When trimming the shingles at the valley, trim the shingles flush with the "W" fold. See **Figure 14**.

ROOF PENETRATIONS

- Flash roof penetrations using standard roofing practices. For further details go to fwaveroofing.com.

VERTICAL WALL FLASHINGS

- Adhere to local building codes and standards when installing roof to wall flashings.
- **FLASHING** - FWAVE recommends installing metal flashings wherever the roof meets a vertical wall.
- Refer to the ROOF TO SIDEWALL and ROOF TO HEADWALL sections for details.
- **COUNTER FLASHING** - Install counterflashing over the top of the flashing as required. All siding or other counterflashing materials should terminate at least ***2" (51mm)*** above the roofing surface and overlap the metal flashing by at least ***2" (51mm)***.
- **SHINGLES** - When shingles overlap a metal flashing, do not fasten through the metal. Use FWAVE approved sealant and adhesive, (see **Table 1**), to adhere the shingle to the metal.

ROOF TO HEADWALLS

- Apply roof shingles up to the edge of the headwall.
- Install an apron flashing at least ***5" (127mm)*** up the headwall and extending at least ***4" (102mm)*** down the roof. Nail apron flashing to the roof deck only and seal to shingles with FWAVE approved sealant and adhesive (see **Table 1**). Do not nail the apron flashing to the wall. Instead, secure with siding material (counter flashing) over the top. Terminate counter flashing at least ***2" (51mm)*** above the roof and overlap the apron flashing by at least ***2" (51mm)***.
- Apply second row of shingles over metal flashing on the roof surface and trim to cover just exposed metal. Use FWAVE approved sealant and adhesive, (see **Table 1**), to adhere the cut shingle to the metal apron. See **Figure 15**.

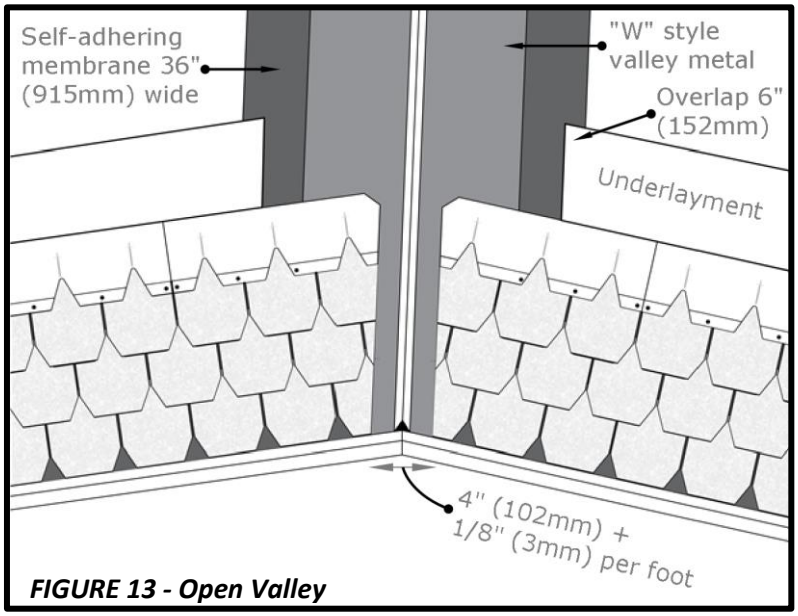

FIGURE 13 - Open Valley

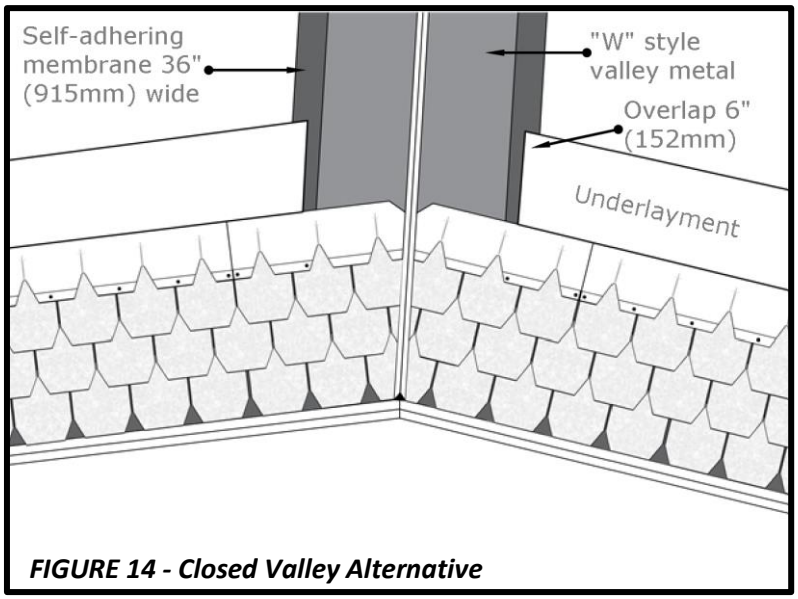

FIGURE 14 - Closed Valley Alternative

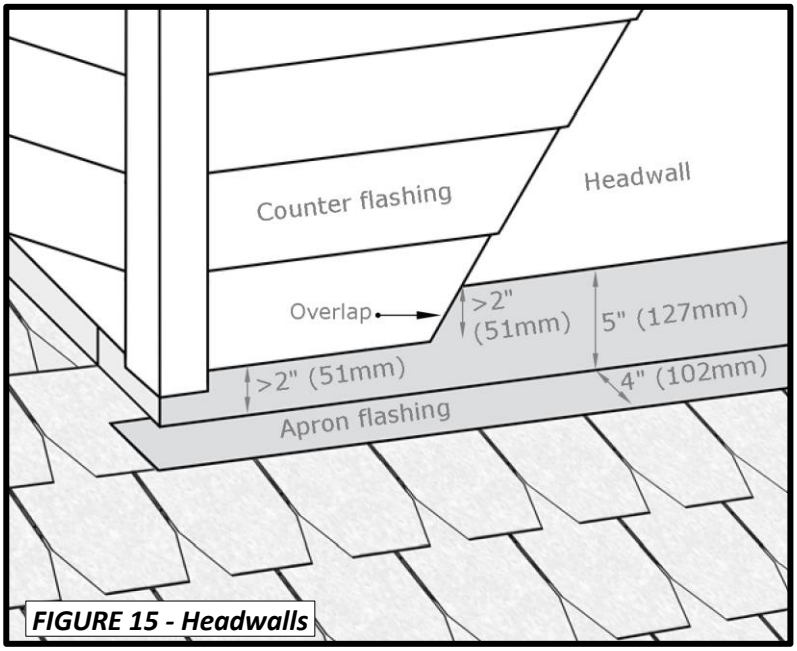

FIGURE 15 - Headwalls

ROOF TO SIDEWALLS

- FWAVE recommends using ***10″ x 8″ (254mm x 203mm) step flashing*** metal. See **Figure 16**. Step flashing must extend at least ***4″ (102mm)*** up the sidewall and at least ***4″ (102mm)*** over underlapping shingles.
- Interlace step flashing with shingle courses as the shingles are applied. Fasten step flashing to the roof deck only, using two nails installed into the top overlapped region. Overlap pieces of step flashing by ***2″ (51mm)***.
- Use FWAVE approved sealant and adhesive (see **Table 1**) to adhere the underside of the shingle to the metal step flashing.

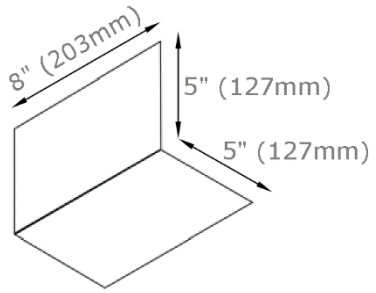

FIGURE 16 - Step Flashing

CHIMNEYS

- Apply underlayment up to the base of the chimney.
- Install an apron flashing on the front of the chimney. See **Figure 17** for recommended dimensions. Install step flashing along the sides. For further details see the VERTICAL WALL FLASHINGS section.
- Install prefabricated metal cricket flashing or field fit using roofing flashings of sufficient width to cover the cricket.
- Install sheet metal cap flashing as counter flashing over flashings such as step flashing and apron flashings. See **Figure 18**.

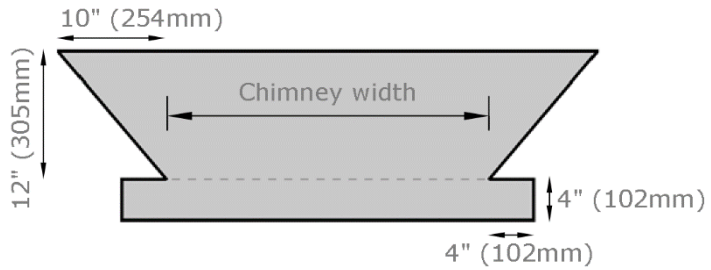

FIGURE 17 - Chimney Flashing

HIPS & RIDGES

- Install F-WAVE® REVIA® ***Designer Slate*** Hip and Ridge Shingles along the hips and ridges.
- Attach using two fasteners, a minimum of ***1 3/4" (44mm)*** in length. Nails must penetrate a minimum ***3/4" (19mm)*** into the roof deck or ***1/8″ (3.2mm)*** through the roof deck. Install nails ***1″ (25mm)*** from the edge of the shingle in the nailing zone indicated on each shingle. See **Figure 19**.
- Make a starter shingle by removing the exposure portion. See **Figure 20**. Install Hip and Ridge with a ***7 3/4" (197mm) exposure***. At the ridge, start the hip and ridge shingles from the opposite direction of the prevailing winds. See **Figure 21**. Begin hips at the bottom of the hip. For further installation details about FWAVE Hip and Ridge, visit fwaveroofing.com.

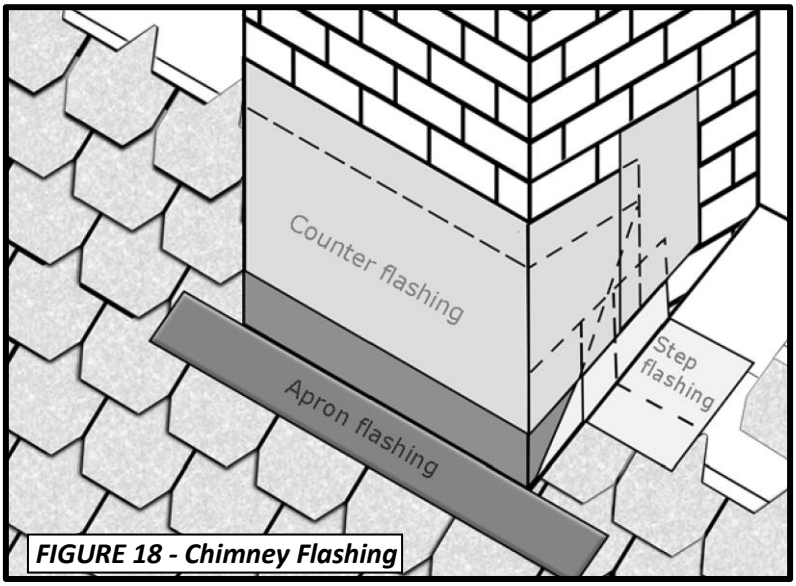

FIGURE 18 - Chimney Flashing

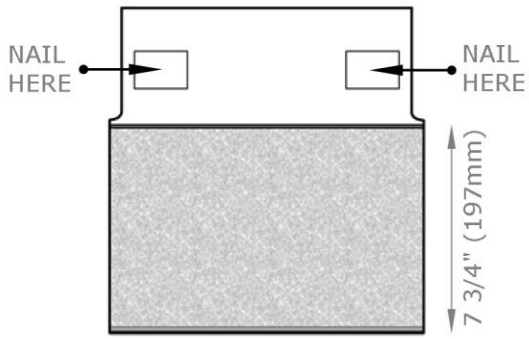

FIGURE 19 - Hip & Ridge

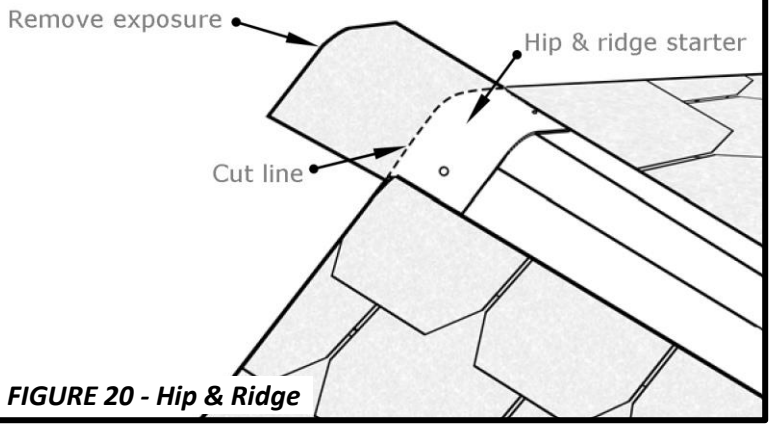

FIGURE 20 - Hip & Ridge

- Where Hip & Ridge Shingles are installed over ridge vent, select ridge vent that is at least ***11" (279mm)*** wide. Install ridge vent according to manufacturer's instructions.

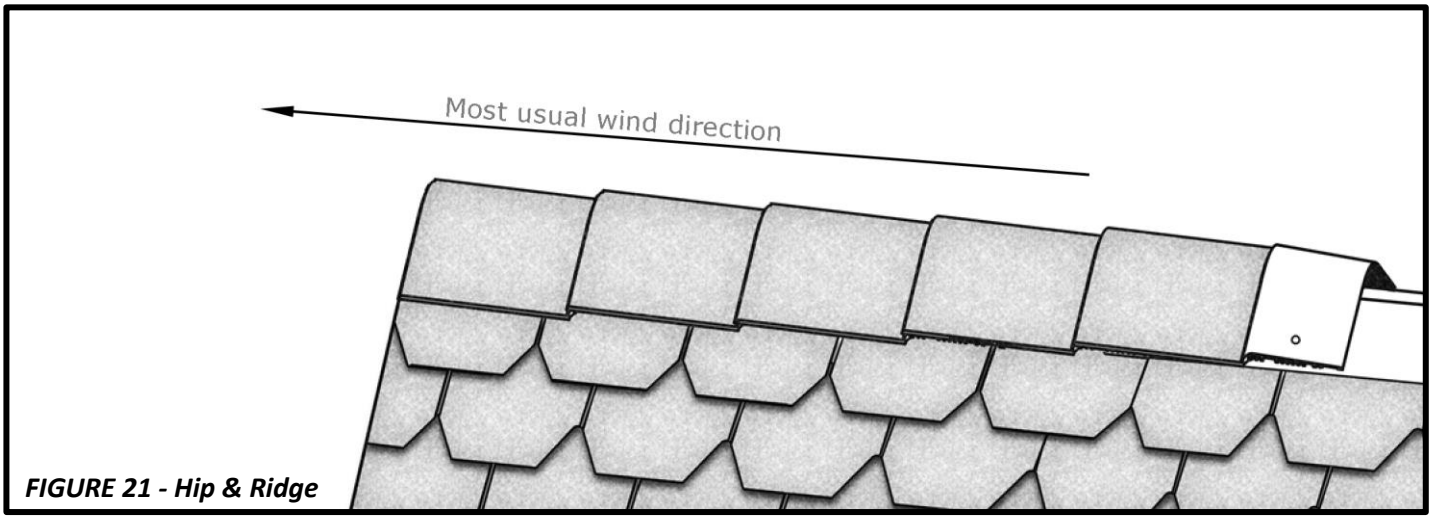

FIGURE 21 - Hip & Ridge